Euro Series Air Handling Units

Installation and Maintenance Instructions

Project:

Contractor:

Sales Order:

Date:

Designed and Manufactured in New Zealand by Cooke Industries Ltd.
31 Station Rd, Penrose, PO Box 12021, Penrose, Auckland 1642, New Zealand
Ph: +64 9 579 2185 Fax: +64 9 579 2181 E-mail: sales@cookeindustries.co.nz

1. GENERAL INFORMATION

The Euro series is a range of direct or belt driven air handling units, suitable for plantroom or external locations, depending upon options chosen at the time of order. The standard operating temperature of these units is -15°C to +40°C.

This manual and all other relevant accompanying documentation must be read in full before installation, operation or maintenance of the unit supplied.

Immediately upon receipt of goods, check for possible damage in transit, paying particular attention to fan impellers, motor, flexible connections, dampers, coil connections and the unit casing. Prior to installation, please check to ensure alignment and smooth rotation of the impeller after transit. Also check to ensure that any ancillary items are included. These may be supplied fitted or, in the case of small items and filters, taped inside the mixing/inlet box. In the event of any damage having occurred or if an item is found to be missing, it is essential to inform Cooke Industries within 7 working days of delivery, quoting the sales order number and the model number, as found on the unit name plate. After this period, we will be unable to accept any claim for damaged or missing goods.

Only authorised, qualified personnel should undertake work on this unit. The entire system must be considered for safety purposes, and it is the responsibility of the installer to ensure that all of the equipment is installed in compliance with the manufacturer's recommendations, with due regard to the current health and safety legislation, and conforms to all the relevant statutory regulations. Where a unit is installed so that a failure of components could result in injury to personnel, precautions should be taken to prevent any such injury. If the unit is installed where there is a reasonable possibility of persons or objects coming into contact with the impeller whilst operational, a guard should be fitted or steps taken to prevent this. It is the installer's responsibility to ensure that access panels are not obstructed in any way and safe working access to the unit for maintenance must be provided.

Please ensure this document and all other relevant documentation is passed on to the end user. This manual forms an integral part of the product, and should be kept for the working life of the product.

2. INTRODUCTION

(A) Installation

All AIRPAK air handling units are subject to thorough and fully documented quality control checks and procedures during manufacture with a complete final inspection prior to leaving the factory. Units are shipped either complete or in sections to be assembled on site, as agreed with the purchaser. Prior to approval for manufacture, the installer should check conditions on site to ensure that access routes are adequate for both the size and weight of the air handling unit sections. Plant location areas should be similarly checked that there is sufficient space around the unit for installation and maintenance purposes.

(B) Commissioning

It is recommended that the installer and his specialist should carry out the commissioning of AIRPAK equipment in accordance with the CIBSE series of Commissioning Codes. Codes A-'Air Distribution', R-'Refrigeration Systems' and W-'Water Distribution Systems' are relevant in most cases. Particular attention should be paid to the procedures outlined in Code A and Sections A.1.4 'Mechanical checks', A.1.5 'Electrical checks' and A.2.6 'Initial running of electrically driven fan sets'. *If AIRPAK is requested to evaluate fan or coil performance the information requested on the data sheets in the appendix must be provided by the commissioning engineer as a minimum.*

(C) General Maintenance

Recommendations for particular maintenance procedures are included in these instructions under separate section headings. In general, periodic checks should be made of internal and external linings and of electrical insulation and wiring. Any metal surfaces that show signs of deterioration due to corrosion should be cleaned and repaired as necessary.

3. INSTALLATION & COMMISSIONING

(A) Support Structure

For standard units, the recommended support structure is a full concrete plinth under the unit. Where this is not practical, strip plinths (or equivalent steel members) should run down the full length of the unit, picking up and supporting the edge of the unit base, and at 1800mm centres (1500 between supports) where the unit is wider than this. Strip plinths running across the full width of the unit and at 1500mm centres down the length are the least preferred, but still an acceptable method.

The plinth height should be sufficient to install a condensate trap, where drain connections from the unit are provided.

Where support structures are not practical, special structural steel bases may be factory fitted to the units. Please enquire with the sales team prior to production if this type of base is required.

(B) Lifting of Units

Experience shows that air handling units are most likely to be damaged during transportation and loading/unloading.

When lifting a unit using a fork truck, ensure that the whole unit is supported by the full length of the forks under the channel base. Refer Figure 1.

Fig. 1

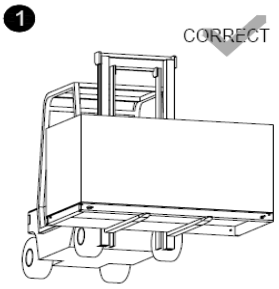

For larger units, ensure that the unit is supported under a minimum of two of the base channels, depending upon the size, weight and number of channels on the unit. Refer Figure 2.

Fig. 2

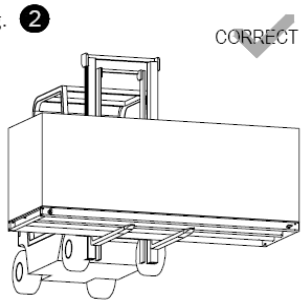

Please note that the unit centre of gravity may be offset from the centre of the unit. Refer Figure 3 & 4.

Fig. 3

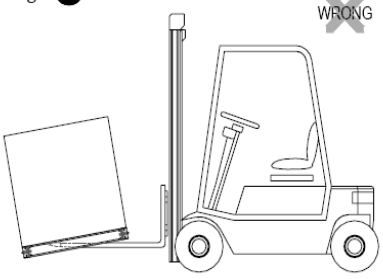

Fig. 4

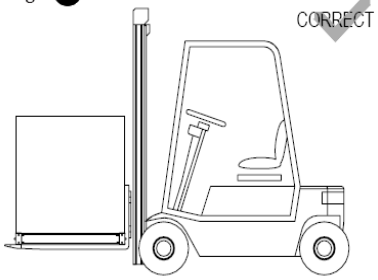

When the unit is being hoisted or lowered by crane, ***proper slings and spreaders must be used to avoid damage.*** See Figure 5 below.

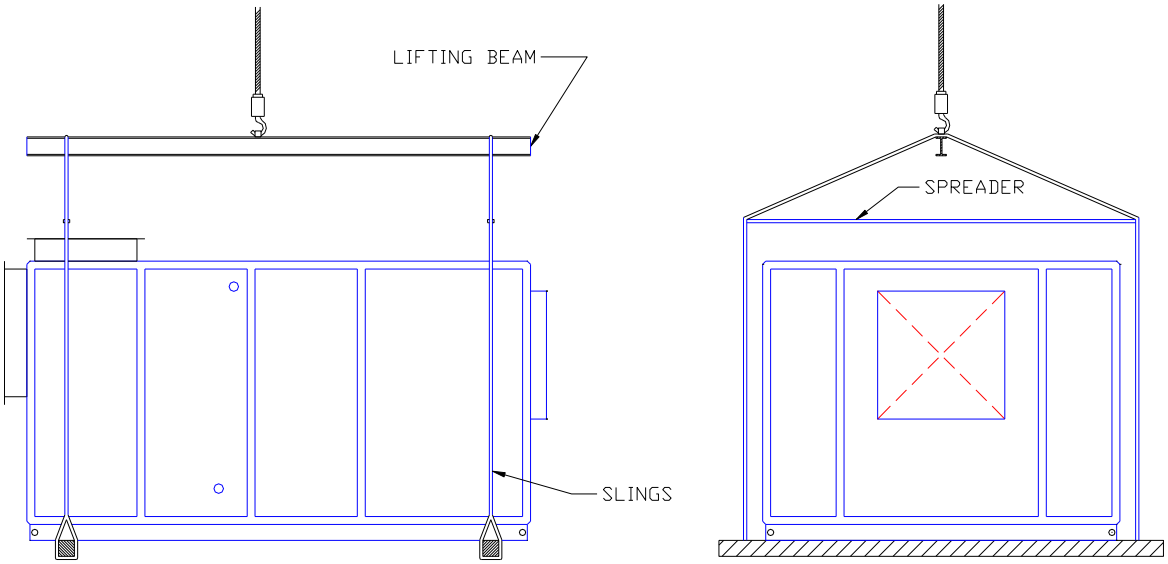

Figure 5 – Crane Lifting Arrangements

It is important that the units are ***placed on a level surface*** to maintain a satisfactory airtight enclosure and avoid distortion to casing or components. Failure to observe the above is most noticeable in doors that bind on the framework.

(C) Joining of Sectional Units

When units are shipped in sections for site assembly by the customer the following procedures should be followed.

- The mating framework faces of the sections should be fitted with a continuous closed cell foam or butyl rubber gasket. The suggested size is 9mm wide x 6mm thick.

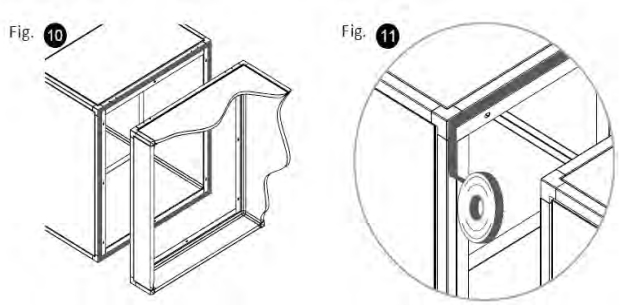

- Align the sections and bring together. This is necessary to maintain a satisfactory airtight enclosure and avoid distortion to casing or components.
- Apply a bead of silicon sealant to either the inside or outside face of the framework. This is a secondary seal.
- Lock the sections together with the securing devices supplied (see Figure 2 & 3 below).

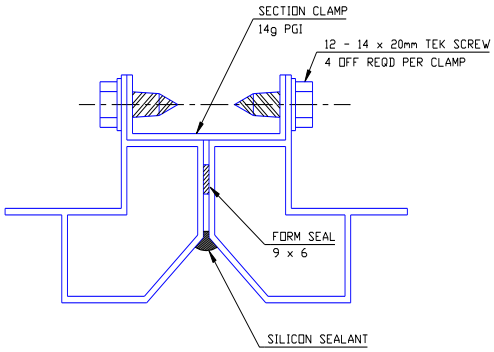

Figure 2 - Internal Fixing of Shipping Split

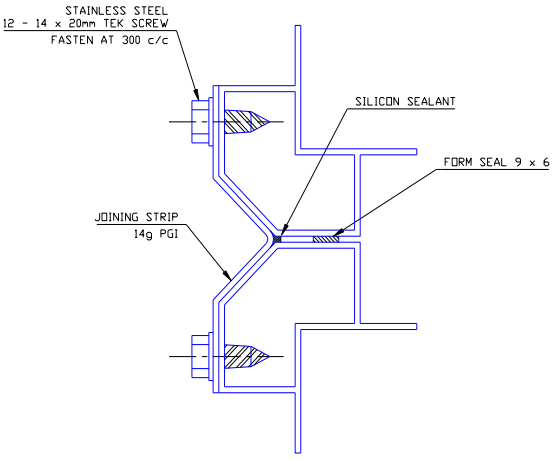

Figure 3 - External Fixing of Shipping Split

(D) Fan and Motor Sections

(i) General

The standard fan and motor set is supported on anti-vibration mountings under a rigid frame inside the units, with a flexible connection to the fan inlet/outlet (dependent upon type). In this instance, mating ductwork may be connected direct to the unit casing. The exception to this is small direct drive forward curved fans with integral motors, which may be hard mounted to the casing. Where additional vibration isolation is provided under the entire unit, then flexible connections should be employed at each attachment point to the unit.

The drive is effected either directly or by means of v-belts and taper lock pulleys. On large motor and fan sets the pulleys may be keyed to their shafts for additional security. The majority of smaller light duty fans (≤710Ø and with spider bearing bracket) have lubricated for life bearings, thus require no lubrication. Larger fans are generally fitted with grease nipples, and require periodic checking. Electrical connections to motors should be made with flexible conduit to a terminal box normally mounted on the outside of the unit.

(ii) Installation and Commissioning

The following checks should be made before running the Air Handling Units.

- Ensure that impellors and pulleys are secure on shafts, and taper lock bushes are thoroughly degreased and tightened.
- Ensure all fan base shipping bolts and packer blocks have been removed.
- Ensure that all bolts securing anti-vibration mounts and motor are fully tightened down.
- If the fan is fitted with a belt drive, check the tension of the belts (16mm deflection per metre span between pulleys is a general guide, but use of proper tension checking tools is recommended).
- Ensure that flexible connections are firmly fixed and undamaged.
- Check for any mechanical damage to fan during shipment from our factory or during installation.
- Check that all moving parts are free to rotate.
- Check to see that no loose packing materials etc. are left near the fan inlets such that they could be sucked into the fan intake. Similarly, ducts should be checked for freedom from obstruction due to materials, tools etc. left behind.
- Ensure correct power supply is connected to the motor with adequate protective devices.
- Site wiring must not be brought into units through access panels or doors.
- On starting, it should be checked that the fan direction of rotation is correct and that the motor is not overloaded. Figure 1 shows a forward curved impellor, Figure 2 a backward

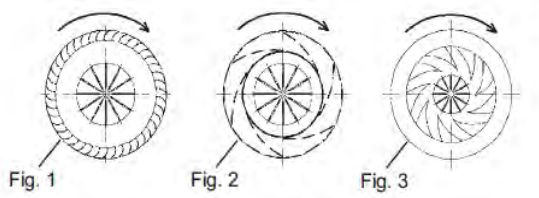

inclined impellor, and Figure 3 a backward curved aerofoil impellor.

- During the first 48 hours of running make frequent inspections paying particular attention to taperlock bushes and, if fitted, the belt drive. After this initial period, the taperlock bushes will require re-torqueing as per the table in the maintenance section and the drive belts will most probably need re-tensioning.

- One of the most common causes of motor failures with forward curved fans is excessive airflow due to over-estimated system resistance, and hence increased power requirement. To overcome this type of failure, the first start-up should be with the main system damper partially closed - to be opened only when correct proportional airflow has been achieved by system regulation.

(iii) Installation and Commissioning of Ducting

The required air flow patterns and an acceptable air velocity must be maintained throughout the air handling unit's complete range of operating conditions. With the exception of certain situations such as the mixing box where the air is mixed, excessive turbulent flow should be avoided. If it is not, excessive pressure drops, high power consumption, unwanted noise generation, moisture carry over and damage to components may arise resulting in a failure to achieve the rated capacity.

Avoid poor ductwork connections to the unit, or incorrect size, shape or arrangement of those external ductwork fittings or components mounted in close proximity of the unit (e.g. fire dampers or inlet louvres). Seriously modified airflow conditions may otherwise result causing the above mentioned unwanted effects.

Also if the airflow is turned against the direction of rotation of the fan, its performance will be affected, as will be the power consumption.

Guide lines for good ducting:

- Ensure that a straight piece of ducting with a length of at least twice the height of the fan opening is attached to the fan spigot before introducing any bends.
- For maximum performance these bends should contain turning vanes or splitters.
- Ensure that any bend close to the fan opening follows the direction of rotation of the fan.

(iv) Wiring of motors

Installation work must be done by a qualified and competent electrician.

Motors above 3kW may require to be operated by a star-delta starter, soft starter, or variable speed drive to reduce the starting current.

Star-delta, dual wound and pole change motors require 6 motor connections and 2 sets of contactors. Two-speed motors require 3 sets of contactors. Separate overloads are required to suit each speed connection.

Motors of frame size 160 and above will have PTC thermistors embedded in the windings to monitor the motor temperature. It is a condition of warranty that these be connected to a suitable monitoring system; either a motor control relay or the appropriate terminals of a variable speed drive. Motor control relays have an additional benefit in that they also provide protection for phase failure and phase rotation.

Terminal markings of motors conform to international standards. These markings and wiring details are generally given on the inside of the terminal box cover or on a diagram placed inside by the manufacturer.

(E) COIL SECTION

(i) General

Coils are completely self-supporting and designed to be fitted directly within the sections of the air-handling unit. All cooling coils incorporate a condensate drain connection for connecting to installers trapping system.

(ii) Installation and Commissioning

When screwed inlet and outlet connections are provided on coils it is important that the ***coil connection be firmly held while making the joint***. If this is not done the coil header may be twisted causing fractures in the tubes.

If the coils have been carefully handled none of the fins have been damaged. If it is found that any of the fins have been flattened they may be straightened carefully using the appropriately sized fin comb.

(iii) Installation and Commissioning of Piping Connections

Piping should be installed in accordance with standard CIBSE practice.

The following are guidelines for piping of chilled water cooling coils to obtain maximum coil efficiency.

- Coils must be piped in counter flow if the rated output is to be achieved. Failure to do so may reduce output by up to 25% and reduce the coils latent/dehumidification capacity.
- Provision should be made in the piping system to allow the coils to completely drain.
- All coil connecting piping, isolating or control valves, and strainers must be independently supported so that no strain is imposed on the coil connections or circuiting.
- All connecting piping and fittings must be thermally insulated. Valves and strainers should be insulated with removable boxes.
- An adequate and continuous vapour seal must be applied to all insulation where the chilled water temperature is below the dew point of the surrounding air.
- For proper commissioning, operating and maintenance of the coil, coil connections should include adequate isolating and measuring equipment.
- Coils with automatic 3-way control valves should be provided with a resistance orifice or valve in the coil bypass leg set to equal the water resistance through the coil and equalise the pressures onto the two inlet ports of the control valve.

For piping of glycol cooling coils, follow the recommendations for piping of chilled water cooling coils.

Guidelines for piping of hot water coils are also generally the same as for chilled water cooling coils with the exception that thermal insulation need not be sealed. Also valves and components must be suitable for the temperatures and pressures involved and due allowances made for thermal expansion.

(iv) Moisture Carry Over Prevention

The following should be taken into consideration:

- All air handling unit doors must be closed and sealed properly.
- Ensure that connections to the coil and drain tray are sealed airtight where they enter the unit. Leakage of air into or out of the unit should not be possible.
- Airflow through coil must be at the design limits. The airflow may however be extreme on initial start-up.
- Ensure ductwork connections are designed as outlined previously to prevent uneven airflow.
- Ensure that there are no problems with the condensate drains.
- Ensure that entering chilled water temperature (or if the coils are direct expansion coils, the refrigerant evaporating temperature) is not lower than design and the leaving chilled water temperature is close to design.
- Ensure that moisture removal requirement is not higher than design. This is observed as a reduction in the on-coil air dry bulb temperature with the on-coil wet bulb temperature at the design temperature.

(v) Condensate Drain Lines

To prevent over flowing of the drain tray, moisture carry over, and thus water damage of the unit or ductwork, the following precautions should be taken:

- Condensate pipe connections to drain pans are required to be at least the full bore size of the pan outlet connection.
- To allow for cleaning of deposits, a union or pipe coupling should be fitted at the pipe connection to the pan.
- A deep U-trap should be joined to the outlet coupling. This will provide a seal when filled with water to prevent air entering or leaving the unit.
- The design of the U-trap should be such that the depth of water in the seal creates a pressure of at least twice the fan suction head within the compartment for draw through applications, or at least the maximum fan pressure at the section for blow through applications.
- The condensate drain should discharge into an open drain within a short distance of the U-trap to ensure that no back pressure is inflicted on the drain causing the flow of condensate to slow down or stop completely.
- Ensure that the drain line is pitched with a gradient of not less than 1 in 50, and that the pipe is adequately supported without high and low spots.
- Drain lines may require insulation to prevent condensation on the outer surfaces, which could result in damage to building fabric or finishes. Insulation or some form of heating may also be required if drains lines are subjected to freezing temperatures.

Figure 1 illustrates two methods of trap venting.

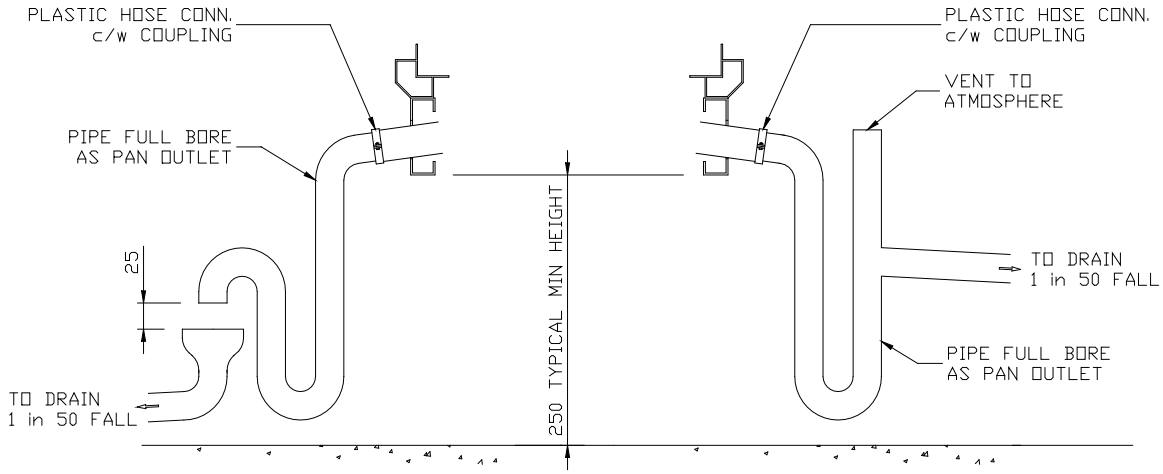

Figure 1

Figure 2 illustrates the minimum requirements for trap design for both suction (negative) and pressure (positive) applications.

- For *SUCTION* applications (coil upstream of the fan), the drain trap should be designed to give a *minimum* depth equal to:

  25mm nominal drop to clear water from the tray

  + Maximum fan suction head

  + Maximum fan suction head

  Note that the fan suction head equals the maximum pressure drop of all components upstream of the fan, and is *not the fan static pressure*. The fan suction head of a typical draw through unit would normally include all upstream components such as coils, pre & final filters, mixing box dampers, and return air/fresh air duct losses.

- For *PRESSURE* applications (coil downstream of the fan), the drain trap should be designed to give a *minimum* depth equal to:

  75mm nominal drop to clear water from the tray

  + Maximum fan pressure

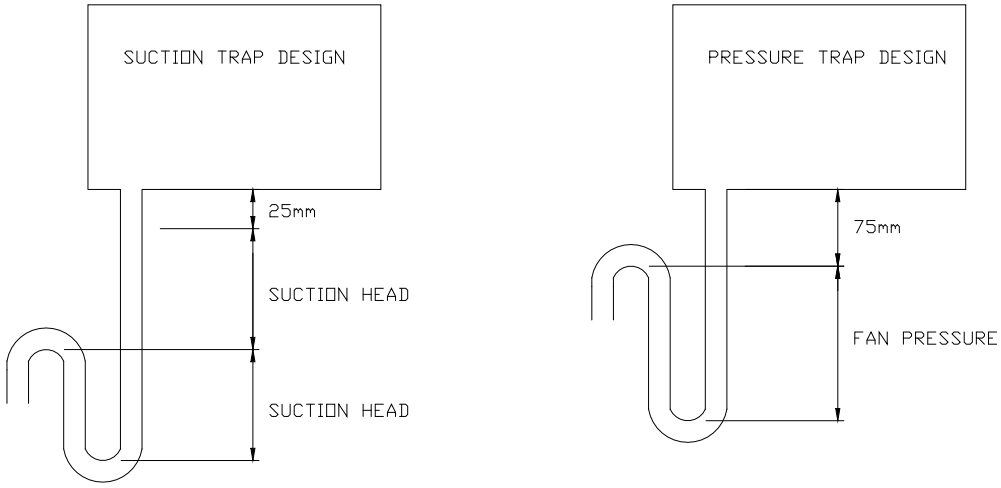
SUCTION TRAP DESIGN
25mm
SUCTION HEAD
SUCTION HEAD
PRESSURE TRAP DESIGN
75mm
FAN PRESSURE

Figure 2

4. MAINTENANCE

(A) Casing

The casing should be regularly washed to maintain the finish. Cleaning should occur at intervals not exceeding 6 months and at much shorter intervals in aggressive environments such as those in close proximity to the sea, geothermal, or industrial situations. Any corrosion issues should be dealt with as they become apparent.

(B) Fan & Motor

(i) General

The following notes are for general guidance and may be varied to suit operating conditions.

At least once every 12 months a major inspection of the entire fan section should be carried out. The following procedure should be followed.

- Isolate the section electrically.
- If fitted with a belt drive transmission, slacken off the drive, then remove and examine the belts. Pay particular attention to any uneven wear in individual belts that could indicate misalignment and possible wear in motor or fan bearings. Shiny surfaces on the inside of the belt generally indicate that the belt tension has been inadequate and the drive slipping.
- Rotate and rock the fan and motor shafts to detect bearing play.
- Thoroughly clean the impeller; any build up of grease and dust will affect the balance of the fan causing stresses and decreasing the bearing life.
- Inspect all internal and external surfaces for signs of deterioration of finish.

After inspection, and replacements if necessary, proceed in accordance with installation instructions before running the plant again.

(ii) Fans

For belt driven DIDW centrifugal fans:

For normal operating conditions, the fan casing and rotor do not require any special maintenance other than checking for corrosion issues. Special applications may require cleaning and inspection as dictated by the conditions. Frequent inspections of fan casing and rotor (depending of nature of the fan application) is good maintenance procedure.

For direct driven SWSI plenum fans

There are two hub arrangements, fixed hub and taperlock hub.

Fixed Hub - the impeller is connected to the shaft end of the drive motor using a fixed hub.

a) Installation: Lightly lubricate all bare surfaces (shaft extension, hub hole). Pull the impeller with the hub (1) up to the shaft collar (2) (transitional fit). For operating temperatures ≤100°C, secure the axial shaft-locking device using the screw (3) and washer (4) and a thread locking adhesive e.g. Loctite. For operating temperatures >100°C , secure the axial shaft-locking device using the screw (3) and washer (4), safety tab washer DIN 432 (5) and rollpin (6). Maintain torques in accordance with the table below.

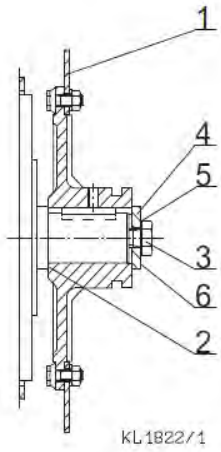

Retaining Bolt	M4	M5	M6	M8	M10	M12
Torque	2.8Nm	5.5Nm	9.5Nm	23Nm	45Nm	79Nm

b) Disassembly: Release the axial screw connection and pull off the impeller with the hub using a suitable pulling unit (secure with hoisting device rated at the corresponding weight).

Taperlock Hub - The impeller is fitted to the end of the motor shaft using taperlock spring collets.

a) Mounting: Clean all bare surfaces (locating surfaces of the taperlock spring collets and motor shaft) and degrease them. Push the taper lock spring collet (1) into the root (2) and make the holes coincide as shown in the drawing. Oil set-screws lightly and screw in (3) - do not tighten yet.

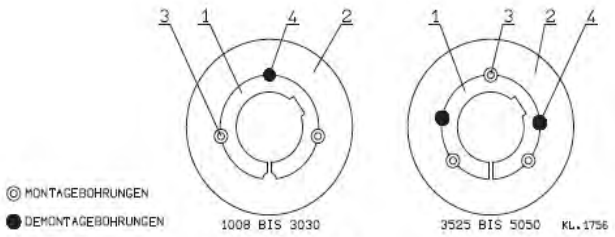

3 mounting holes, 4 removal holes

Push the impeller with taper lock spring collet (1) onto the shaft without loading it (using a hoist if the impeller weight requires it), align the axial position and tighten the setscrews (3) symmetrically.

Observe the tightening torque given in the table. Fill empty holes with grease, to prevent the penetration of foreign bodies. After approximately 1 hour of running time, check the tightening torque of the screws for the value required.

Taperlock	1008	1108	1210	1610	2012	2517	3020	3030	3525
Torque	5.6	5.6	20	20	30	50	90	90	115

b) Removal: Loosen all set-screws (3), depending on the size of the collet, unscrew one or two set-screws completely, oil them and screw them into the removal holes (4). Pull on one or both set-screw s, until the collet (1) comes free of the root (2). The impeller can now be taken off.

(iii) Electric Motors

Electric motors should be checked once a year. If the motor fails any of the checks below, have the motor overhauled by the manufacturer or a reputable motor re-winder.

- Inspect motors to ensure air passages are free from foreign matter and remove any obstructions.

- Check each phase with an ammeter for overload when the motor is placed in service and at least once per year thereafter.

- Check line voltages are within permissible limitations, particularly if motor is overloaded, or if current readings vary by more than 5% between phases. Check and remedy the cause of overload. Always operate motors with thermal overload fuse protection of the proper capacity.

- Test motor windings annually for insulation resistance. If low, remedy the fault.

- The electric motor bearings are generally pre-packed for frame sizes up to 132 and require no re-lubrication during their operating life. For frame sizes 160 and up, the lubrication system includes a drain plug that allows the outflow of grease. The following exert is from the WEG motor maintenance manual, however check with the specific manufacturer's manual for lubrication intervals.

WEG RECOMMENDATIONS FOR MOTOR REGREASING

Machines without Grease Nipples

Motors up to frame size 200 are normally fitted without grease fittings. In these cases, the re-greasing shall be done during preventive maintenance service paying attention to the following aspects:

- Take motor apart carefully.
- Take all the grease out.
- Wash the bearing with kerosene or diesel.
- Dry the bearings.
- Re-grease the bearing immediately.

Motors Fitted with Grease Fitting

It is strongly recommended to grease the machine while running. This allows the grease renewal in the bearing housing. When this is not possible due to health and safety risks to the operator, proceed as follows:

- Turn off the motor
- Clean the area near the grease nipple.
- Put in approximately half of the total grease, and then run the motor for 1 minute at full speed. Then turn off the motor and pump in the remainder of the grease.
- The injection of all the grease with the motor in standstill can make the grease penetrate into the motor, through the bearing housing inner seal.

Inspections intervals depend on motor type and on application conditions. Refer to the tables below for the bearing type based on the motor frame size, and then the lubrication interval.

Motor Frame Size	Bearing Drive End	Bearing Non Drive End

63		6201 ZZ	6201 ZZ
71		6003 ZZ	6202 ZZ
80		6204 ZZ	6003 ZZ
90S & 90L		6205 ZZ	6204 ZZ
100		6206 ZZ	6205 ZZ
112		6207 ZZ	6206 ZZ
132S & M		6208 ZZ	6207 ZZ
160M & L		6309 Z C3	6209 Z C3
180M & L		6311 Z C3	6211 Z C3
200M & L		6312 Z C3	6212 Z C3
225 S/M & 250 S/M		6314 C3	6314 C3
280 S/M *(2pole)*		6316 C3 *(6314 C3)*	6316 C3 *(6314 C3)*
315 S/M *(2pole)*	6319 C3 *(6314 C3)*	6316 C3 *(6314 C3)*	

TABLE 1 - BALL BEARINGS - Series 62/63
Relubrication intervals (running hours – horizontal position)
62 Series

Bearing	II pole		IV pole		VI pole		VIII pole		X pole		XII pole		Grease
	60Hz	50Hz	60Hz	50Hz	60Hz	50Hz	60Hz	50Hz	60Hz	50Hz	60Hz	50Hz	(g)
6209	18400	20000	20000	20000	20000	20000	20000	20000	20000	20000	20000	20000	9
6211	14200	16500	20000	20000	20000	20000	20000	20000	20000	20000	20000	20000	11
6212	12100	14400	20000	20000	20000	20000	20000	20000	20000	20000	20000	20000	13

63 Series

Bearing	II pole		IV pole		VI pole		VIII pole		X pole		XII pole		Grease
	60Hz	50Hz	60Hz	50Hz	60Hz	50Hz	60Hz	50Hz	60Hz	50Hz	60Hz	50Hz	(g)
6309	15700	18100	20000	20000	20000	20000	20000	20000	20000	20000	20000	20000	13
6311	11500	13700	20000	20000	20000	20000	20000	20000	20000	20000	20000	20000	18
6312	9800	11900	20000	20000	20000	20000	20000	20000	20000	20000	20000	20000	21
6314	3600	4500	9700	11600	14200	16400	17300	19700	19700	20000	20000	20000	27
6316	-	-	8500	10400	12800	14900	15900	18700	18700	20000	20000	20000	34
6319	-	-	7000	9000	11000	13000	14000	17400	17400	18600	18600	20000	45
6322	-	-	5100	7200	9200	10800	11800	15100	15100	15500	15500	19300	60

Notes:

The tables above are specifically intended for re-lubrication with MOBIL Polyrex ® EM grease, and a bearing absolute operating temperature of:

- 70ºC (158ºF) for 160 to 200 frame size motors
- 85ºC (185ºF) for 225 to 355 frame size motors

Use of other types of grease is not recommended, and should be checked first with WEG.

For every 15ºC (59ºF) above these limits, re-lubrication intervals must be reduced by half. Shielded bearings (ZZ) are lubricated for bearing life, as long are they operate under normal conditions and temperature of 70ºC (158ºF).

The above apply to horizontal position motors. When motors are used in the vertical position (shaft running vertically), the re-lubrication intervals should be reduced by half.

WARNING: Excess grease can cause bearing overheating resulting in complete failure of the bearing.

(iv) Drives

Check V-belt drives after the first 48 hours of operation, and subsequently at three monthly intervals.

- Check belts and pulleys are free from any foreign material that may cause slip or damage to belts.

- Check belt wear. Multiple belt drives must be replaced as complete matched sets. Different belt types or brands must not be mixed, as such irregularities will seriously affect belt life, and may cause vibration on start-up. Never force belts onto pulleys. Slacken off belt adjustment to allow easy fitting of belts.

- Check belt tension with a belt tension gauge and refer to the belt manufacturer's recommended tension guide (a rough rule of thumb is for a mid-span deflection of 16mm per metre of span with a 50N load (SPA) or 75N load (SPB). The majority of belt stretch will take place during the first few hours under load and the tension of newly installed v-belts should be checked frequently during the first few days of operation. Thereafter belts should be inspected three monthly and tension adjusted as found necessary.

  The best tension for a drive is the lowest tension at which the belts will not slip under the highest load condition (generally start-up). Belt tension is optimised per drive selection based on drive ratios, pulley sizes & centre distances. In the absence of data for a specific drive, typical drive tension data for Optibelt drives can be used as follows:

Belt Section	Small Pulley Diameter	Recommended Static Tension (Newton) Optibelt Standard Belts	
		Initial Tension	Re-tension
SPZ	<90	250	200
	90 to 140	350	250
SPA	<100	350	250
	106 to 140	400	300
	140 to 200	500	400
	>200	Check	Check
SPB	<160	650	500

160 to 224	700	550
236 to 355	900	700
>355	Check	Check

- Check pulley alignment with a straight edge. Pulleys must be correctly installed with both shafts parallel and in line. Poor alignment will result in excessive wear, noise and vibration, and possible bearing damage.

(v) Bearings

Housed fans up to size 710∅ in configuration types F & R (standard duty) have lubricated for life bearings. Housed fans from size 710∅ and above, and housed fans for high pressure applications will have bearings fitted with grease nipples pre-fitted.

The following checks should be carried out at least every 6 months depending upon the operating conditions and the bearing type.

- Check bearings for noise. Listen for noise by using a stethoscope or a piece of wood or a screwdriver between housing and ear. A continuous whirring noise indicates the bearings are running correctly. A harsh or irregular noise indicates the bearings should be checked for damage.

- Check bearing temperature. Bearings running up to 1500 RPM will normally be warm to touch (approx. 32°C). Bearings on high-speed fans up to 3000 RPM may be very hot to touch (approx. 50°C). The normal maximum running temperature for ball and roller bearings is 68°C. The temperature will increase immediately after filling with new grease, returning to the normal operating temperature after approximately five hours of running.

- Re-lubricate bearings in accordance with lubrication instructions.

- Bearings should be greased at least once per year regardless of low operating hours. If operating hours are high, lubrication will be required more frequently. Use new grease only and ensure grease is free from grit and dust particles.

- Check locking collars for tightness. Loose collars can result in wear to fan shafts. Always tighten collar in the direction of shaft rotation prior to tightening the setscrew.

- Only trained personnel, following the specific directions supplied on demand by the bearing manufacturer should carry out the dismantling of the bearings.

Sealed Bearings: - The bearings are pre-packed and require no re-lubrication during their operating life.

Plummer Blocks and Pillow Blocks: - The grease should be replaced at least every 12 months.

Plummer Blocks without grease nipples: - Mark housing caps before removal. Remove housing cap, and existing grease. The bearing should be thoroughly cleaned out before being repacked with clean grease. Refill to 70% capacity, pressing the new grease into the bearing cage, but do not over pack bearings! Replace housing caps ensuring they are on the correct housing and replaced the correct way round.

Plummer Blocks with grease nipples: - Using grease fittings supplied on the bearing housings, force three times the nominated quantity of grease (for regrease only) into the bearing using a lever type pressure grease gun. Approx. 1 pump of a standard grease gun is equal to 1gm of grease. Operate gun slowly to avoid damage to bearing seals.

Plummer Blocks with grease relief valve: - Lubricate with three times the normal quantity of grease one hour after starting and again after twenty-four hours of running.

(vi) Spares

When ordering, the reference data from the respective fan or motor nameplate should be quoted.

(C) FILTER SECTION

(i) Panel, Bag & Rigid Filters

Panel, bag or rigid filters are generally fitted into proprietary holding frames within the unit. A differential pressure gauge should be fitted to measure the pressure drop across the bank and throwaway filters replaced or cleanable filters serviced when the 'dirty filter pressure drop' is exceeded. The dirty pressure drop is typically 200Pa for coarse grade panel filters (≤G4) and 250Pa for fine grade (≥F5) bag and rigid mini-pleat type filters.

Filter clips should be inspected and replaced as necessary. It is essential these are fitted correctly to maintain the integrity of the filter seal and minimise air bypass.

(ii) HEPA Filters

The manufacturer or his representative should replace HEPA filters in order to maintain the integrity of the dust seal. They will then test the integrity of the filters as installed, and offer compliance certificates to AS1807.7-2000 where necessary.

(iii) Activated Carbon Filters

Carbon filters normally have an active life of about 12 months. It is advisable to remove a sample from the pack and return to the manufacturer to determine the remaining working life, preferably after the first six months and at subsequent six monthly intervals.

(iv) Dampers

Dampers will be supplied and fitted to inlet and mixing sections of the air handling unit as required. They will have been set at our works and their operation checked. Ensure any ductwork site connected to the dampers does not rack or strain the dampers, as this may cause the blades to bind. Also ensure that if actuators are fitted to the damper, fixings are through the flange, not the body of the damper, which may house gear wheels. Before the plant is run, check that all blades operate smoothly and make a satisfactory seal when closed. Make similar checks during periodic plant inspections. Clean and lubricate all moving parts with Teflon spray annually.

(D) Coil Section

Very little in the way of maintenance is necessary. Occasional checks should be made of the pipe connections to ensure that there are no leaks. Every 12 months the face of the coil should be examined and lightly hosed down with low pressure water and a light soap based detergent if required to remove any accumulation of dust or contaminants between the fins. The frequency of this procedure should be increased in corrosive environments such as swimming pools and marine environments.

Maintaining a high standard of filtration (≥F7) will ensure that there is minimal dust build-up on the coils. UVC lamps also assist to kill bacteria and viruses that thrive in the damp environment.

It should be noted that should water inside coils be allowed to freeze, serious damage will be caused to the coil tubes. This must be considered if plant is inactive or shut down during cold weather. This particularly applies to full fresh air units operated in sub-zero conditions if the heating coil is downstream of the cooling coil.

(E) Special Equipment

Special equipment such as heat recovery wheels, humidifiers, gas fired heaters etc. have specific maintenance instructions, and these are appended to the rear of the manual.

(i) APPENDIX

FANS	***Test Reading***
Air volume (L/s)	
Fan total pressure (Pa)	
Static pressure at fan inlet (Pa)	
Static pressure at fan outlet (Pa)	
Fan pulley diameter (mm) *(if fitted)*	
Motor pulley diameter (mm) *(if fitted)*	
Fan speed (rpm)	
Motor speed (rpm)	
Running current (A)	
Confirmation of steady current draw	
Confirmation of fan rotation	

COILS	***Test Reading***
Air volume (L/s)	
Coil face velocity (m/s)	
Entering dry bulb temperature (°C)	
Entering wet bulb temperature (°C)	
Leaving dry bulb temperature (°C)	
Leaving wet bulb temperature (°C)	
Water entering temperature (°C)	
Water leaving temperature (°C)	
Air side pressure drop (Pa)	
Water side pressure drop (kPa)	
Confirmation of counter-flow piping arrangement	